Product Information	Product Name:	Portable Steel Frame Stadium Chair For Bleachers(17"X15"X13")	SKU: 328067
	Imprint Area:	Front Max Imprint Size: 8"W x 6"H	back Max Imprint Size: 8"W x 6"H

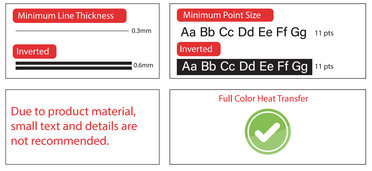

Front

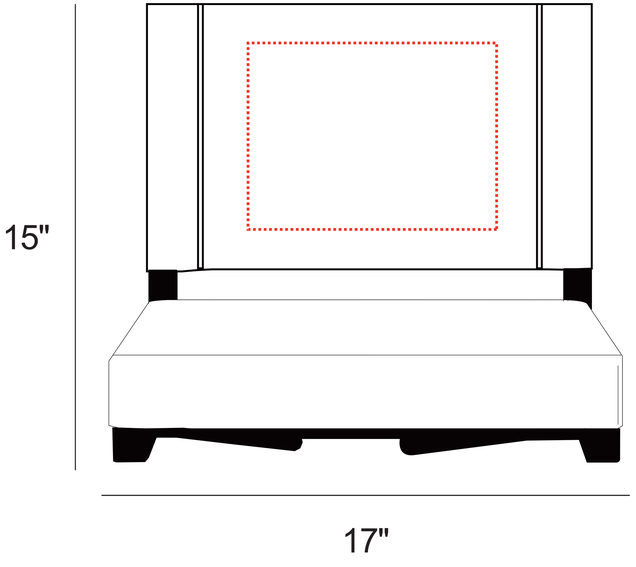
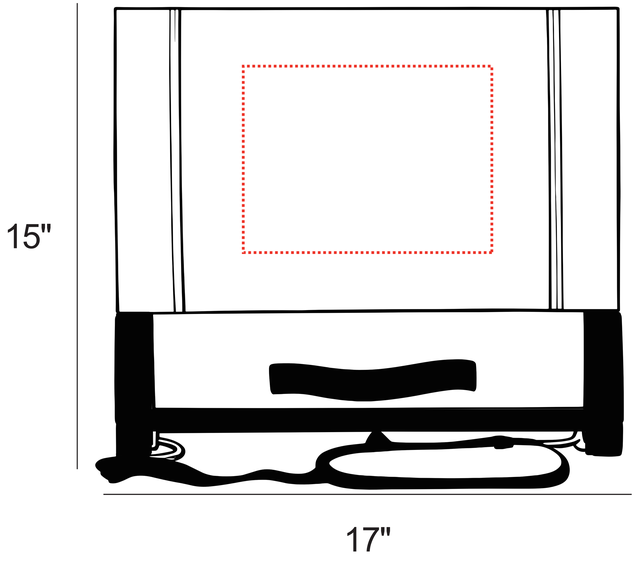
Back