Product Information	Product Name: Extra-Large Premium RPET Insulated Cooler Tote	SKU:344309
	Imprint Area: Front : Max Imprint Size: 6.3"W x 6.7"H	
	Imprint Area: Back : Max Imprint Size: 5.5"W x 6"H	

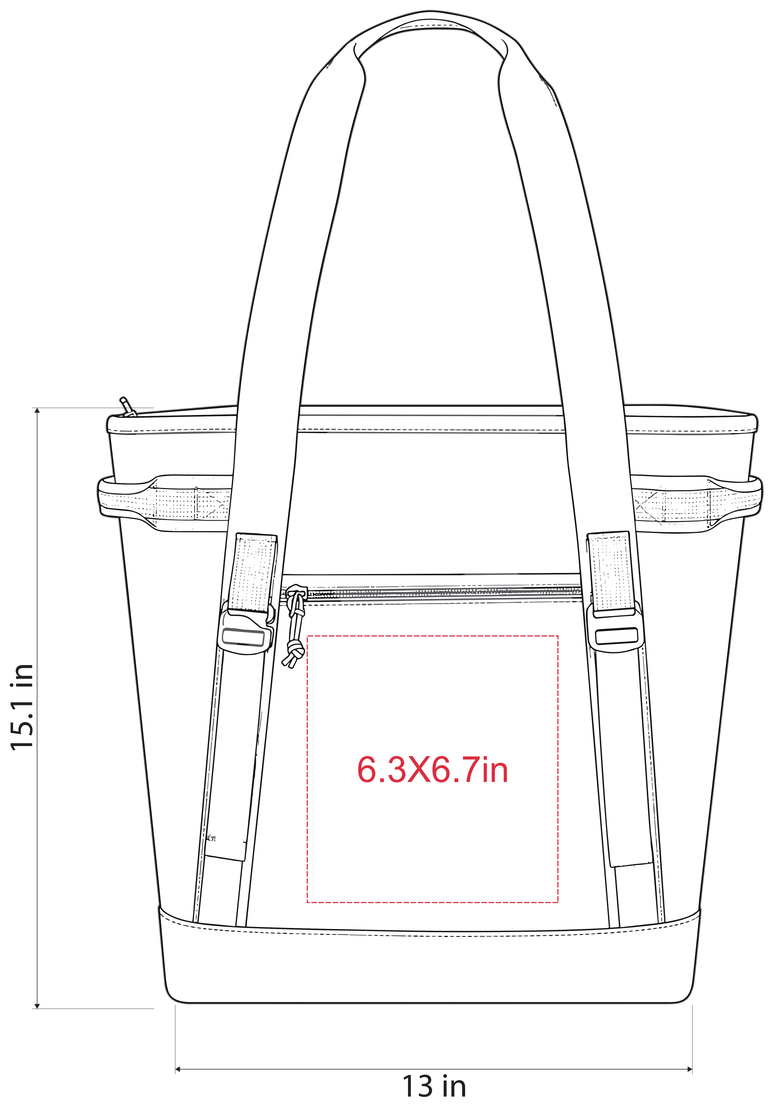

Front side

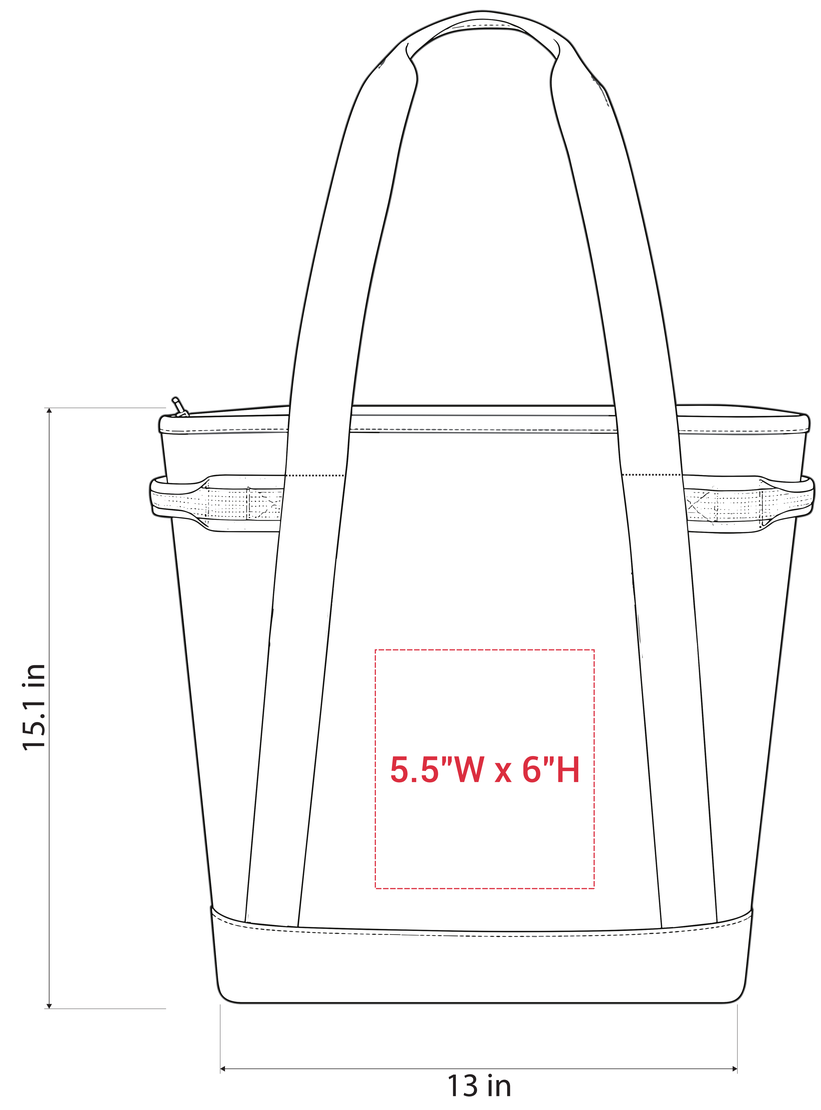

Back side