Product Information	Product Name:	Large Cotton Laundry Bag For College Students	SKU: 313789
	Imprint Area:	Front and Back: Max Imprint Size: 10"W x 10"H	

Front side

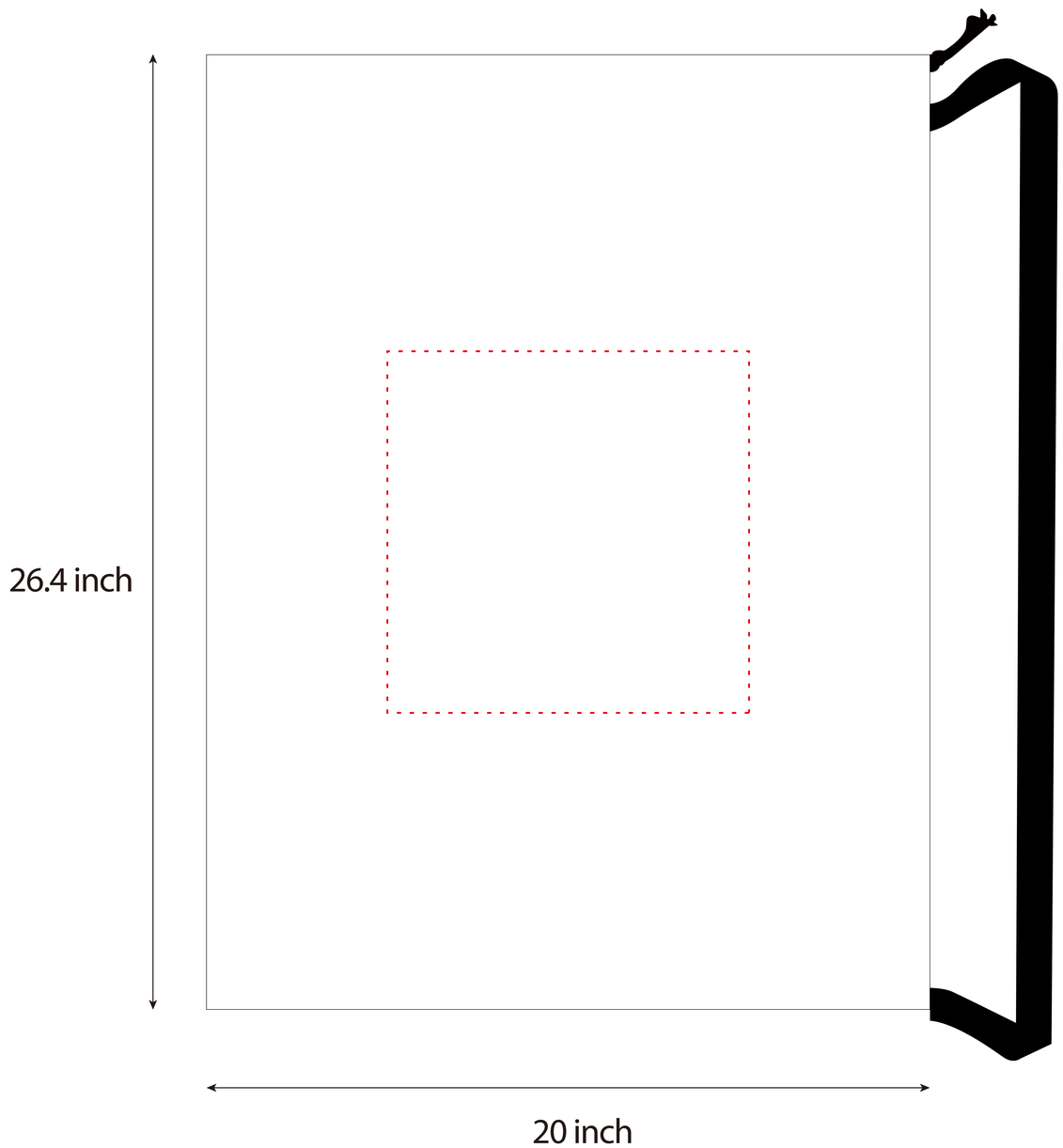
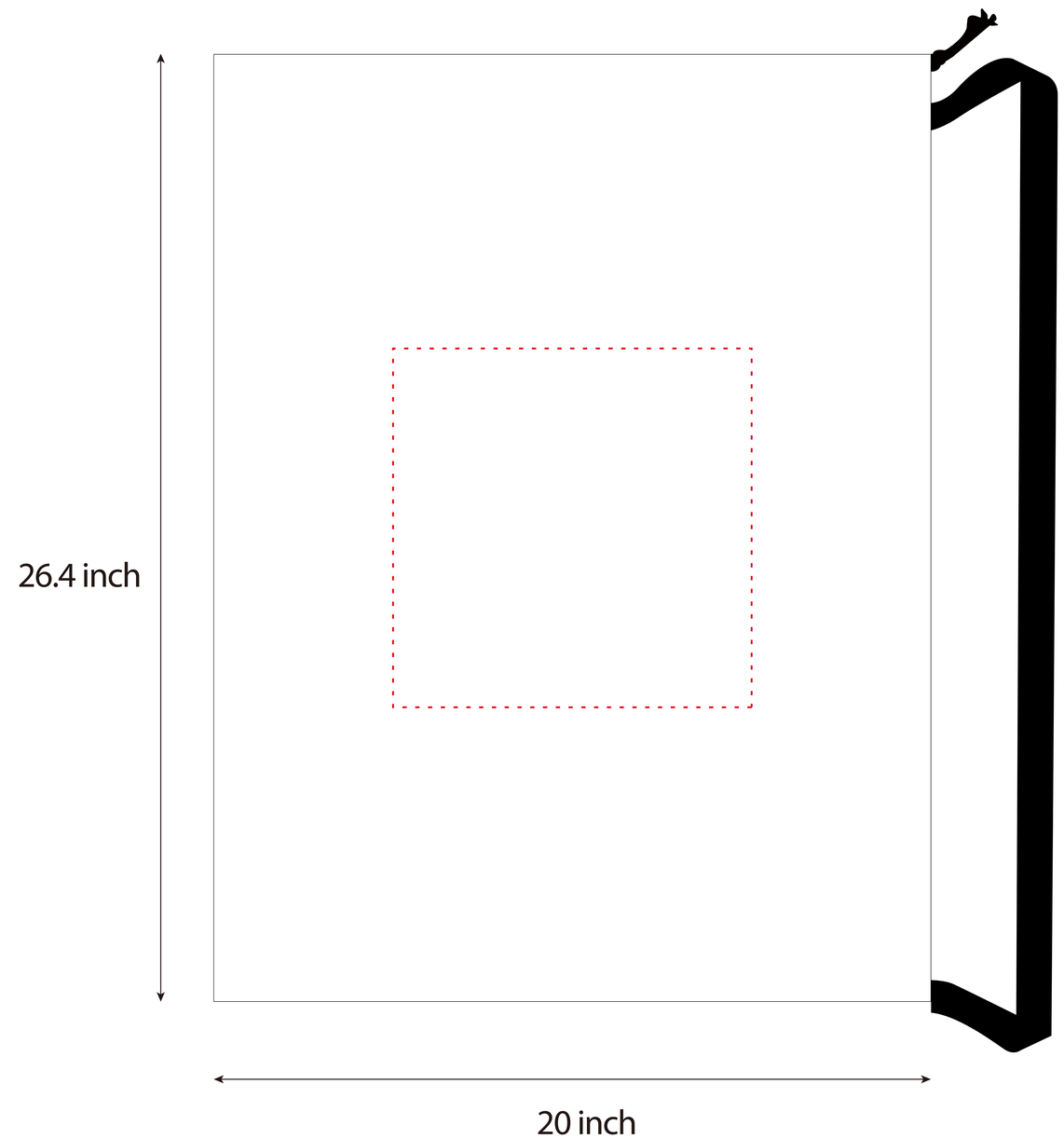
Back side