Product Information	Product Name: 10Ft Backlit SEG (Silicone Edge Graphics) Trade Show Display	SKU: 337633
	Product Size: SEG Backwall : 122" X 94.48"; Podium : 33.5" X 43"	Imprint Size: 122" X 94.48"; 33.5" X 43"

Podium

(C) Front

(D) Back

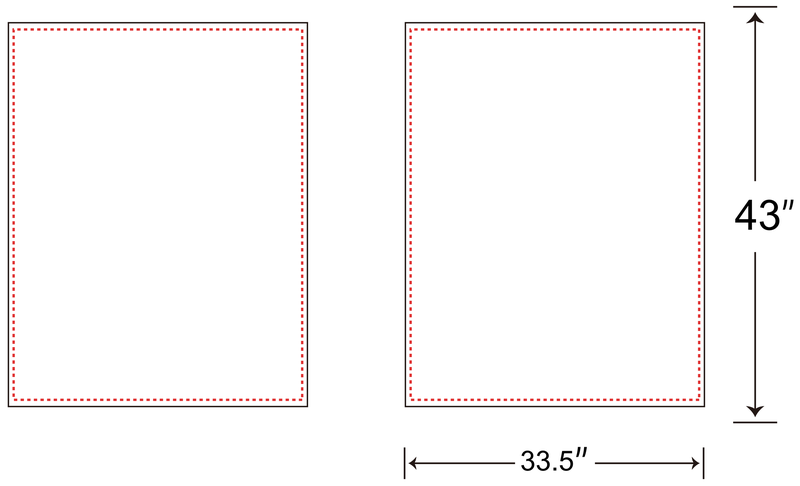

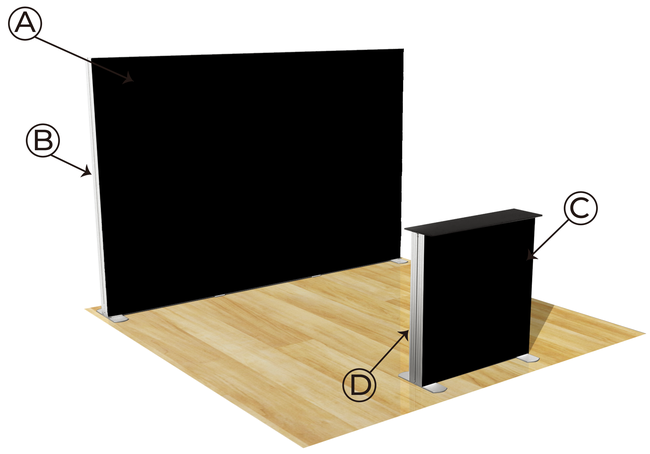

SEG Backwall

(A) Front
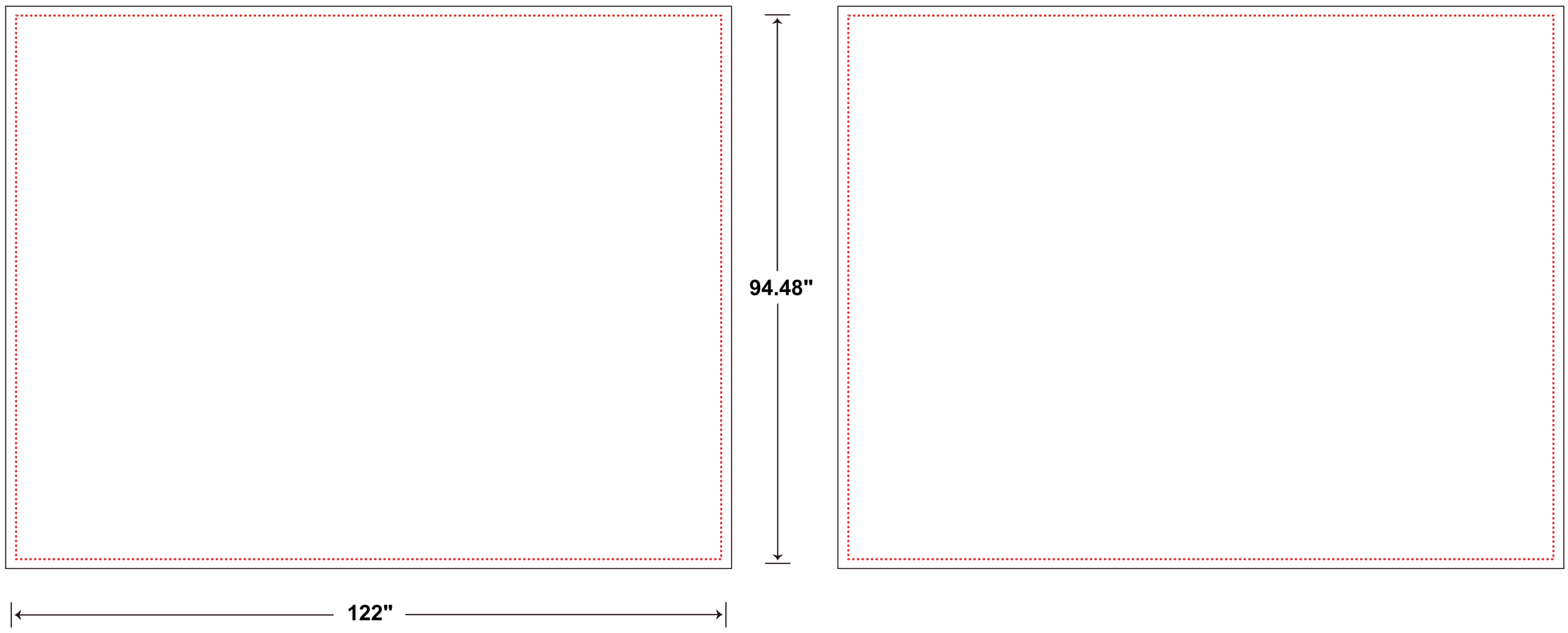
(B) Back