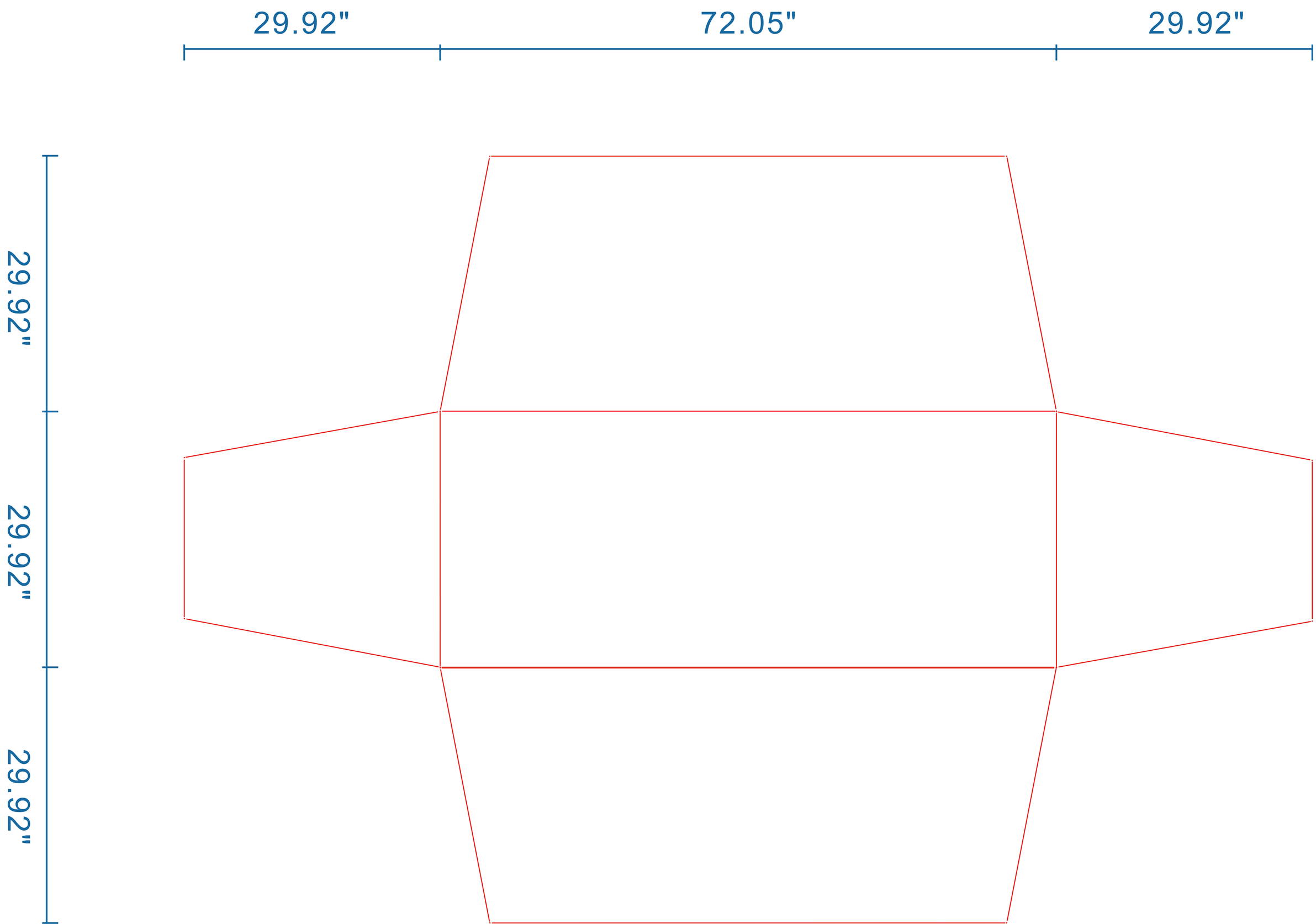Product Information	**Product Name:** 10ft Custom Trade Show Booth Kit With Backdrop, 2 Feather Flags & Table Cover	**SKU: 333791**
	Product Size: 10 Ft	**Imprint Area:** 131.89"W x 89.76"H