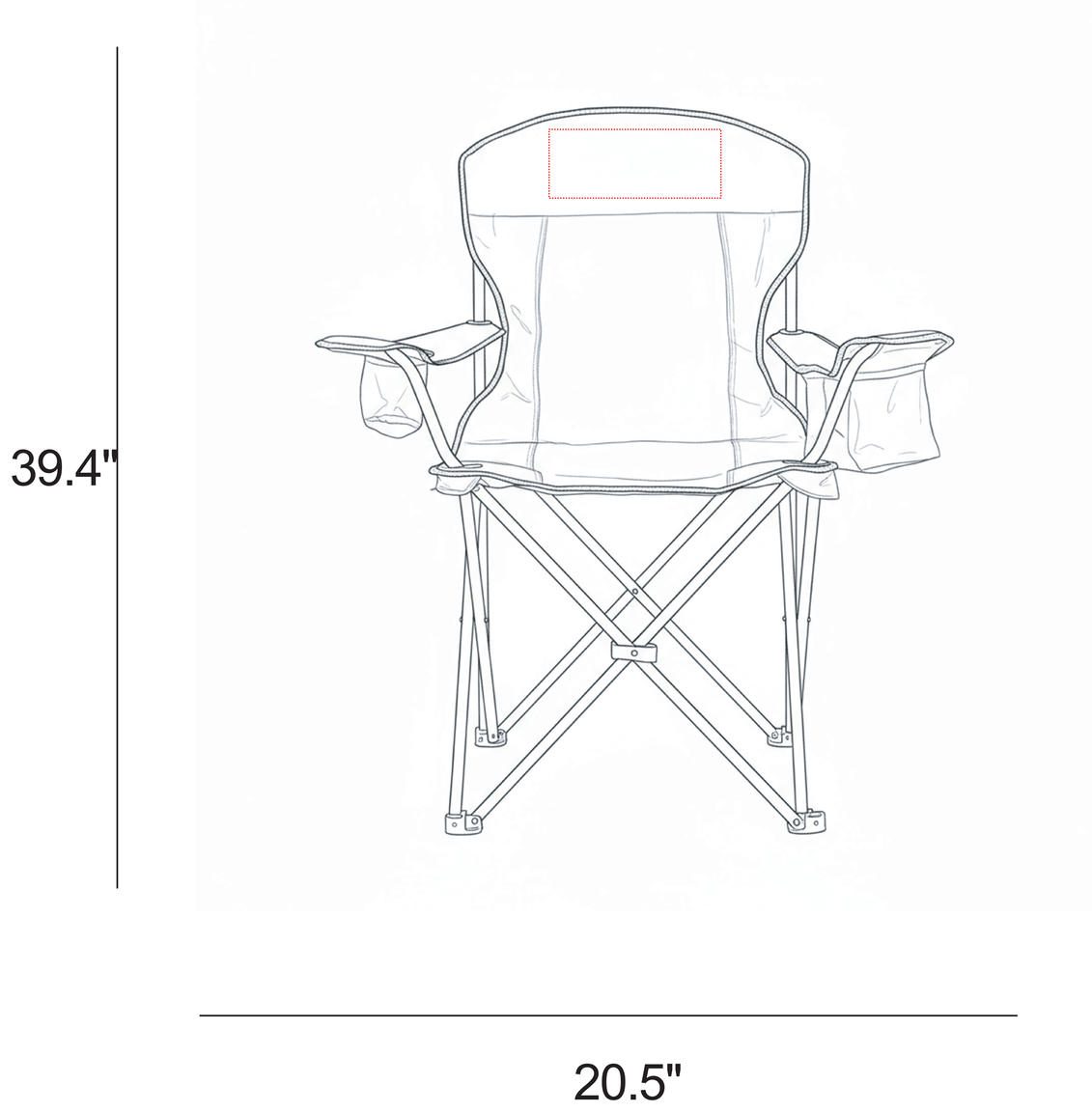Product Information	Product Name: 3-Can Cooler Folding Chair With Cup Holder	SKU: 325063
	Imprint Area: Front Max Imprint Size: 10"W x 4"H back Max Imprint Size: 10"W x 4"H