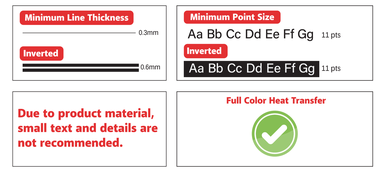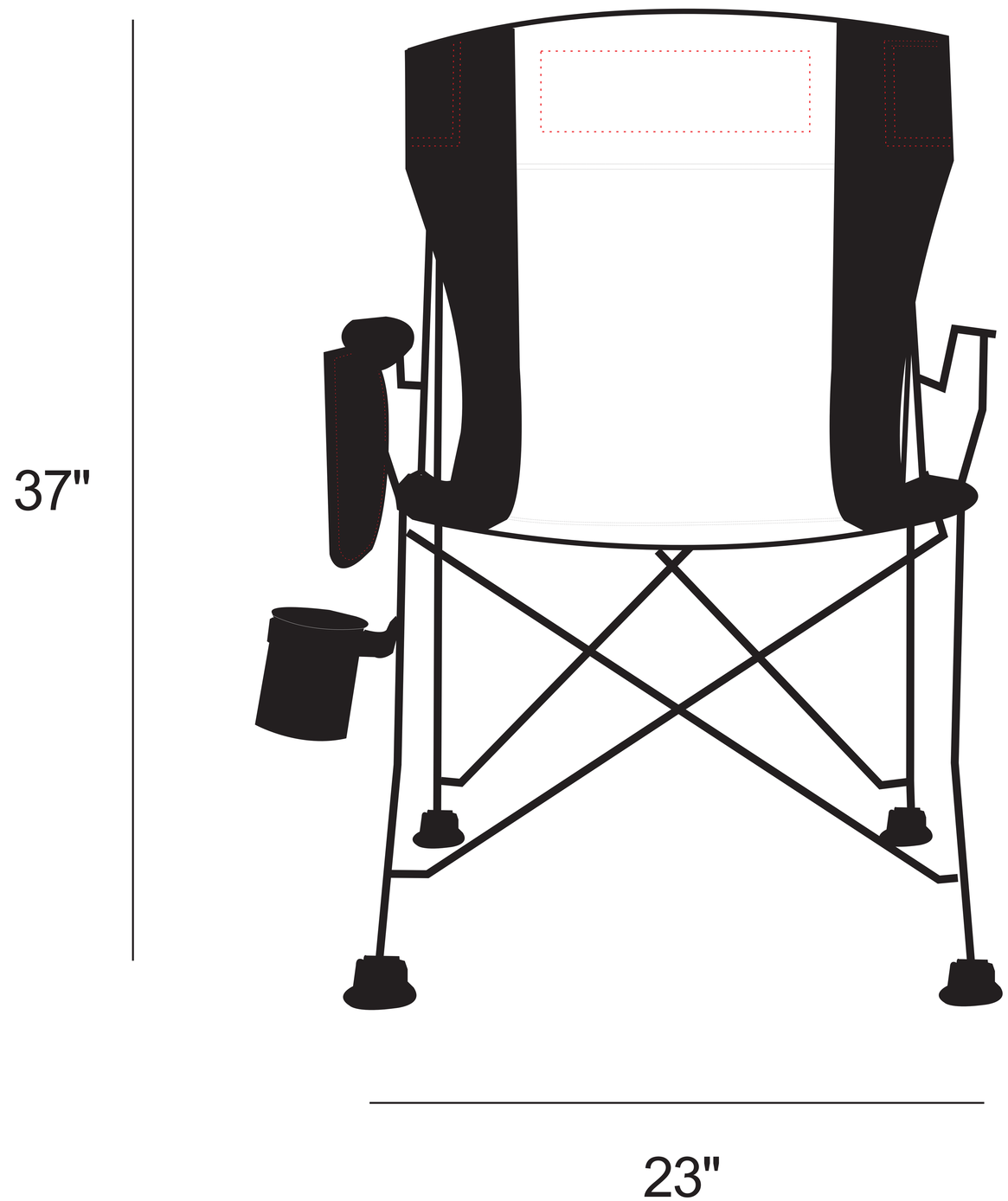Product Information	**Product Name:** Portable Folding Camping Chair Holds 350lbs For Outdoors(23"X23"X37")	**SKU: 327829**
	Imprint Area: Front Max Imprint Size: 10"W x 3"H back Max Imprint Size: 10"W x 3"H