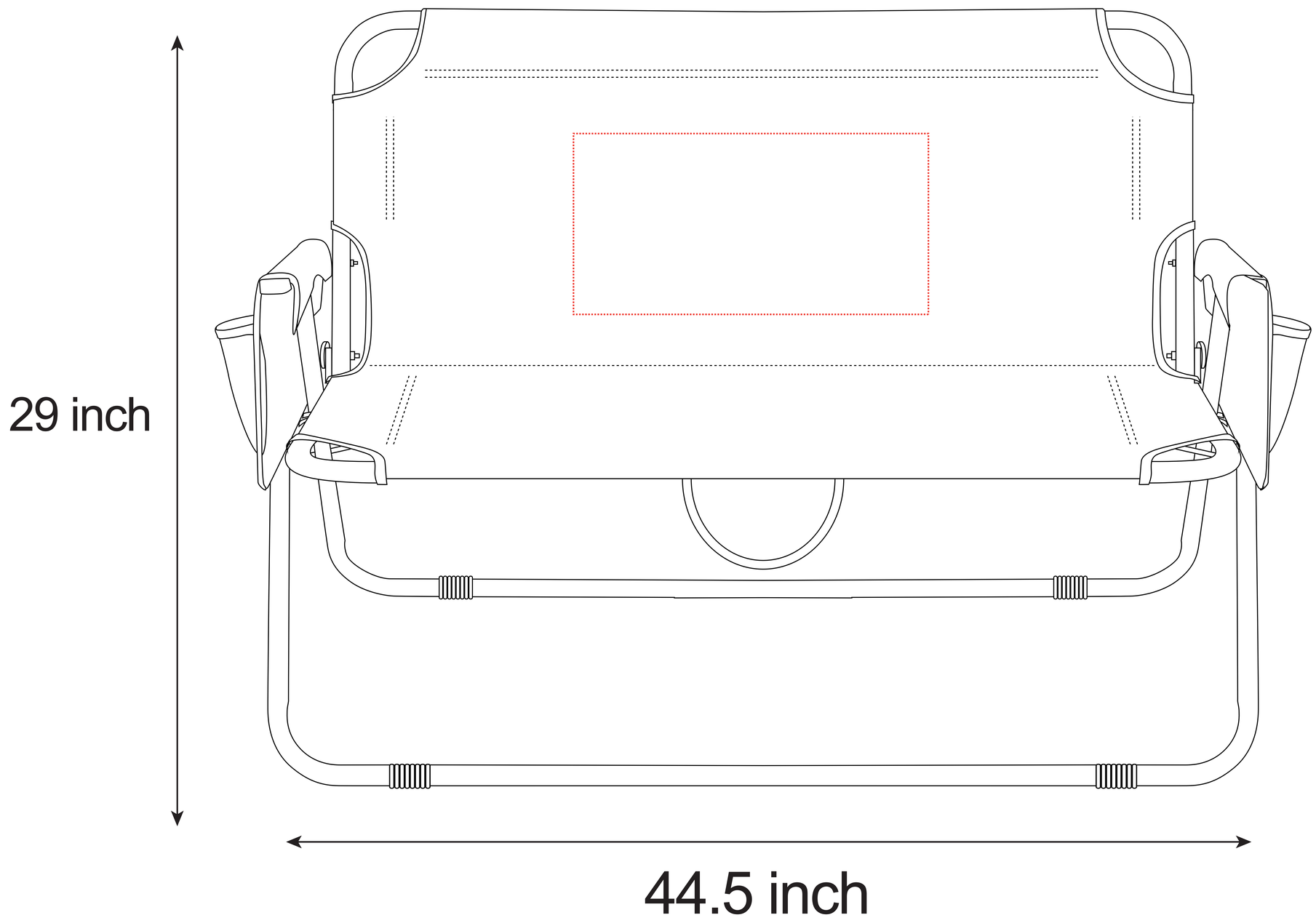Product Information	Product Name: Tailgating Couch	SKU: 335934
	Imprint Area: Front Max Imprint Size: 15.7"W x 8"H